| "Z" PIN POSITION | |
|---|---|
| 1 | 0-15° THREADS (EVERY SIDE) |
| 2 | 15-30° THREADS (RIGHT SIDE) |
| 3 | 15-30° THREADS (LEFT SIDE) |

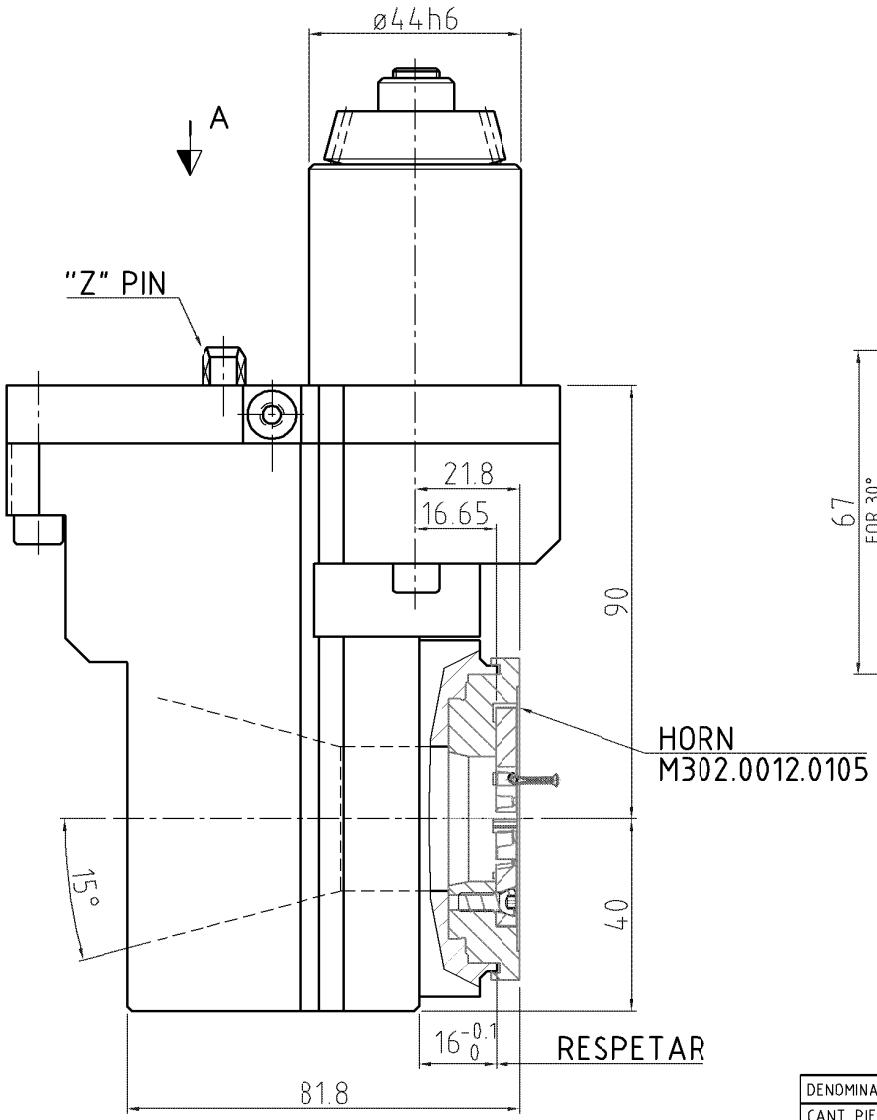


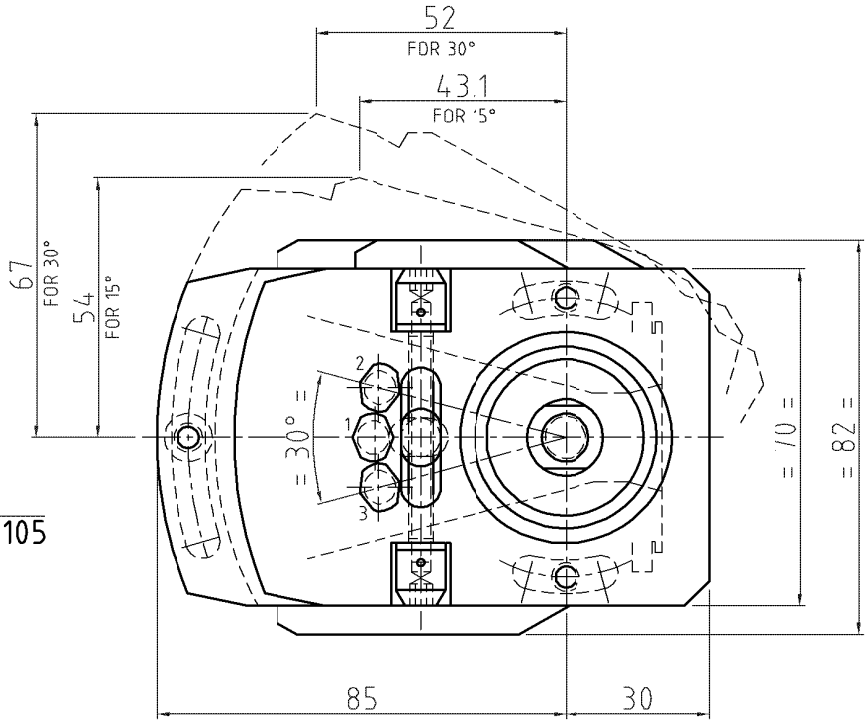


VIEW FROM "A"

| | | | |
|---|---|---|---|
| MACHINE TYPE | STAR SV-20 | | |
| ATTACHMENT | CYL. ø44 + GEAR | LUBRICATION | LONG LIFE |
| SPINDLE TYPE | SEE DRAWING | IN | LEFT |
| RATIO | 1.5:1 (REDUCER) | OUT | RIGHT |
| MAX SPEED | 6000 RPM | WEIGHT | Kg |

| | | | | |
|---|---|---|---|---|
| DENOMINACION | LAYOUT | | MATERIAL | P.035.00006 |
| CANT. PIEZAS | FECHA | NOMBRE | MODIFICACION, ZONA Y MOTIVO | |
| Nº CONJUNTO | | | | |
| | DIBUJADO | C.Itarte | | Nº P.035.00022 |
| O. F. | COMPROBADO | | | |
| | FECHA | 7/5/07 | | |
| | ESCALA 1/1 | MADAULA S.A. MECANICA DE PRECISION | | SUSTITUIDO POR |
| | | | | SUSTITUYE A |